ESS-DIVE’s Community Data and Metadata Reporting Formats

data.ess-dive.lbl.gov

ESS PI Meeting Breakout 2022

Presenters

Rob Crystal-Ornelas

Postdoc Researcher

Dylan O'Ryan

Student Research Assistant

Amy Goldman

Earth Scientist

Presentation Overview

- What are **data reporting formats**?
- **Workshop** using CSV and file-metadata reporting formats
- 5 minute break
- Examples of using **water chemistry and hydrologic monitoring** reporting formats
- Summary / Q&A

Takeaways

- Data standardization is a **key part of data management**
- **Hands-on experience** with 2 of ESS-DIVE's formats
- Hear about how other **DOE projects** are using reporting formats

Reporting formats can increase data reusability & many ways to learn more

When poll is active, respond at **pollev.com/robertcrysta184**

Text **ROBERTCRYSTA184** to **37607** once to join

Familiarity with ESS-DIVE

published datasets previously

future data contributor

downloaded data

attended previous ESS-DIVE presentation

Powered by Poll Everywhere

Start the presentation to see live content. For screen share software, share the entire screen. Get help at **pollev.com/app**

How familiar are you with data standardization

Not very familiar with data standardization

Familiar with the concept, but my data aren't standardized

Some of my data follow some standards

Most/all data I create or use follows standards

If you reuse data (or even if you don't) what are some challenges you can envision when trying to reuse someone else's data?

Intro to (meta)data reporting formats

Thank you to our ESS-DIVE Community Partners!

K. Ely (BNL)

T. Velliquette (ORNL)

S. Heinz (ORNL)

K. Boye (SLAC)

S. Pennington (PNNL)

B. Bond-Lamberty (PNNL)

A. Rogers (BNL)

A. Goldman (PNNL)

P. Weisenhorn (ANL)

R. Devarakonda (ORNL)

How are data standards different from reporting formats?

Darwin Core

- **Data Standards** - Decades of development, accredited by governing org.
- **Reporting Formats** - Community-driven still enable data harmonization and synthesis

Why is it important to use a consistent format?

Year	City	Amount
1990	New York City	$1,123,456.00

(image from Dougherty & Ilyankou 2021)

Why is it important to use a consistent format?

Year	City	Amount
1990	New York City	$1,123,456.00
1995-96		2.2 mil
2000s	NYC	No data
2020	New_York	5000000+

(image from Dougherty & Ilyankou 2021)

Formatted data are **ready to use**

year	city	amount
1990	New_York_City	1123456.00
1995	New_York_City	2200000.00
2005	New_York_City	-9999
2020	New_York_City	5000000.00

Why consider using the reporting formats?

- **Organize your own data**
  - “Think of yourself as your most important future collaborator” (Lowndes et al. 2019)
- Great **data visibility** and **reuse**
- Tools and services that enhance **data curation**

Reporting formats can enable extraction, subsetting, and viz

When data are harmonized and standardized they are ready to use by **humans and machines**

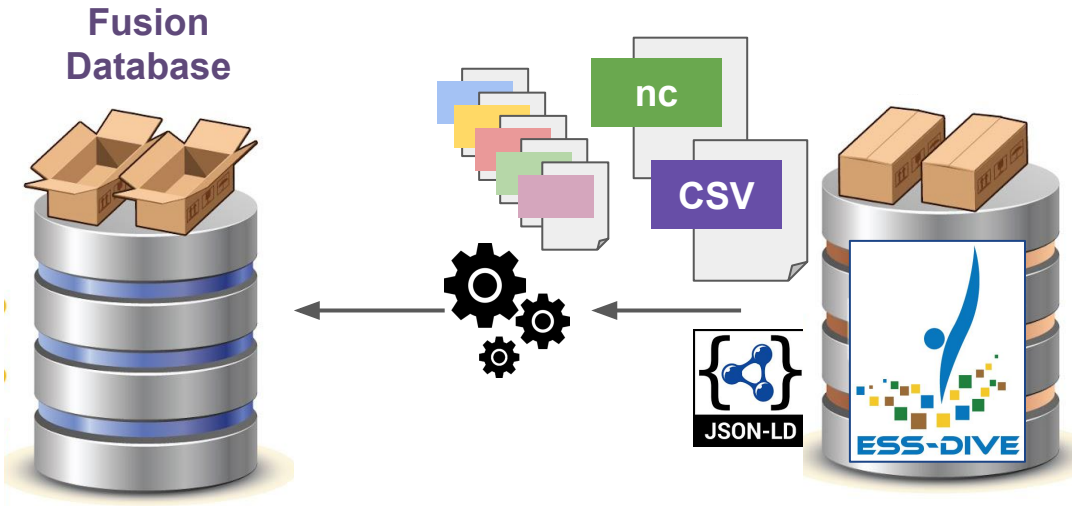

Components of a dataset (data package)

Dataset

Data Files

- CSV
- Images
- Code
- KML files

Metadata

- Information ABOUT your data.

11 ESS-DIVE reporting formats for many data types

ESS-DIVE

Data Files

CSV Metadata

Velliquette, Heinz, Devarakonda (ORNL)

Model Data Archiving

Simmonds (LBNL)

Soil Respiration

Bond-Lamberty, Pennington (PNNL)

Leaf Physiology

Rogers, Ely (BNL)

Hydrologic Monitoring

Goldman (PNNL)

Water/Soil Chemistry

Boye (SLAC)

Amplicon Sequencing

Weisenhorn (ANL)

Metadata

Package Level Metadata/JSON-LD

Agarwal, Hendrix (LBNL)

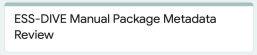

Package Metadata Quality

Damerow (LBNL)

File-level Metadata

Velliquette, Heinz, Devarakonda (ORNL)

Sample IDs/Metadata

Damerow (LBNL)

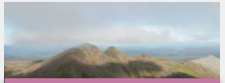

Locations metadata

Crystal-Ornelas (LBNL)

Process for developing RFs

- 6 teams of **Community Partners** spread out across National Labs
- Reviewed **100 +** existing standards

Reporting formats

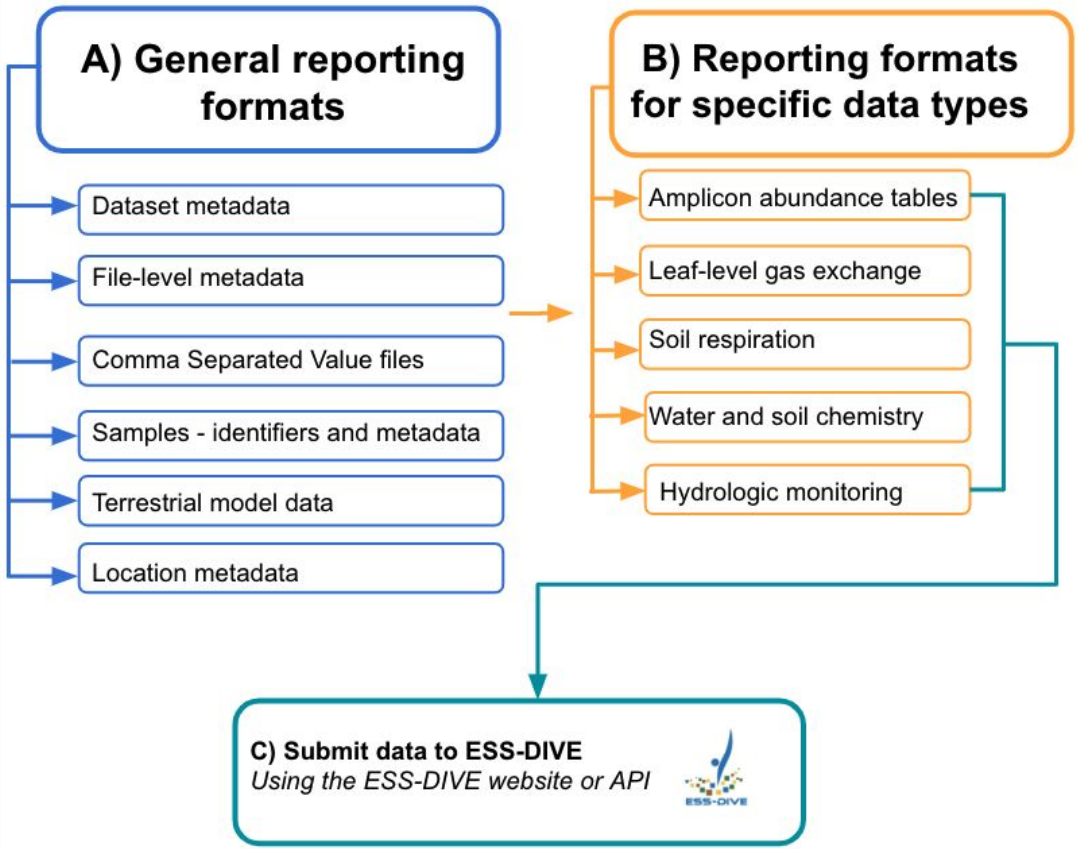

https://docs.ess-dive.lbl.gov/

(Crystal-Ornelas et al., in review)

ESS-DIVE's Community Space on GitHub

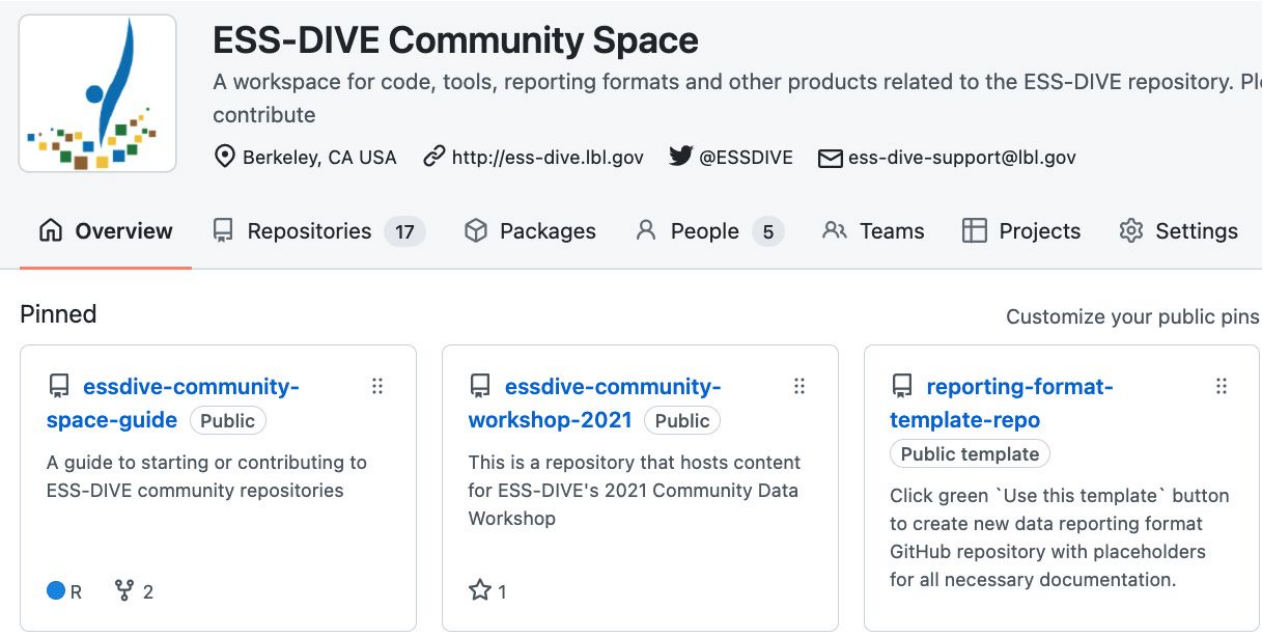

GitHub page is great place to provide **feedback**

Reporting format documentation on **GitHub**:
https://github.com/ess-dive-community

Reporting format documentation as **website**:
https://docs.ess-dive.lbl.gov/contributing-data/data-reporting-formats

Engaging research community with RFs

- RFs in use at **6 DOE projects**
- **12 datasets** submitted to ESS-DIVE That use RFs
- Virtual Site visits to **4 DOE projects since Dec 2021**
- **5 papers publish (+1 in review), 10 community webinars**

Reach out for a **site visit** or **office hours**

WHONDRS

- water soil sediment
- Samples
- CSV
- FLMD

Belowground biogeochemistry SFA

- Samples
- CSV
- FLMD

Workshop using the file-level metadata reporting format

Takeaways from this hands-on workshop

- **Example data files** (timestamps, lat/long, pH) & blank templates
- Familiarity with two **broadly applicable ESS-DIVE reporting formats**
- **Templates that you can use** when submitting your next datasets to ESS-DIVE

File-level metadata

What are file-level metadata?

- Granular information at the data file level (e.g., file name & description, start and end dates)

Why provide file-level metadata?

- Data users will have general understanding of info contained within a file
- FLMD can enable automatic parsing of data files so that users can eventually search & locate files across data collections

Terri Velliquette
Oak Ridge National Laboratory

Our example **data** and **the process**

What we are starting with:

- A tabular data file

Sample_Name	DateTime_Start	DateTime_End
text	YYYY-MM-DD hh:mm	YYYY-MM-DD hh:mm
Site_1_2022-01-18	2022-01-18 15:32	2022-01-18 16:03
Site_3_2022-01-18	2022-01-18 15:23	2022-01-18 15:45
Site_7_2022-01-18	2022-01-18 15:11	2022-01-18 15:32
Site_8_2022-01-18	2022-01-18 15:18	2022-01-18 15:44
Site_9_2022-01-18	2022-01-18 15:23	2022-01-18 15:55
Site_1_2022-01-25	2022-01-25 15:37	2022-01-25 16:01
Site_3_2022-01-25	2022-01-25 16:07	2022-01-25 16:44

What we are filling out:

- A **file-level** metadata template

File_Name	File_Description

- A **data dictionary** template

Column_or_Row_Name	Unit

A closer look at the data file

Sample_Name	DateTime_Start	DateTime_End	Location_ID	Latitude	Longitude	Water_Temperature
text	YYYY-MM-DD hh:mm	YYYY-MM-DD hh:mm	text	Decimal_Degrees	Decimal_Degrees	Degrees_Celsius
Site_1_2022-01-18	2022-01-18 15:32	2022-01-18 16:03	Site_1	38.14637	-121.25532	10.2
Site_3_2022-01-18	2022-01-18 15:23	2022-01-18 15:45	Site_3	38.14824	-121.26637	10.4
Site_7_2022-01-18	2022-01-18 15:11	2022-01-18 15:32	Site_7	38.1497	-121.29353	10.1
Site_8_2022-01-18	2022-01-18 15:18	2022-01-18 15:44	Site_8	38.14943	-121.29981	10.7
Site_9_2022-01-18	2022-01-18 15:23	2022-01-18 15:55	Site_9	38.1533	-121.3	10
Site_1_2022-01-25	2022-01-25 15:37	2022-01-25 16:01	Site_1	38.14637	-121.25532	9.6
Site_3_2022-01-25	2022-01-25 16:07	2022-01-25 16:44	Site_3	38.14824	-121.26637	9.7
Site_7_2022-01-25	2022-01-25 15:35	2022-01-25 15:58	Site_7	38.1497	-121.29353	10.1
Site_8_2022-01-25	2022-01-25 15:53	2022-01-25 16:27	Site_8	38.14943	-121.29981	10.7
Site_9_2022-01-25	2022-01-25 15:15	2022-01-25 15:41	Site_9	38.1533	-121.3	10.6

Example data meant to simulate data the environmental scientists collect, dates and times, locations, water temp

Slide showing file directory of example data folder

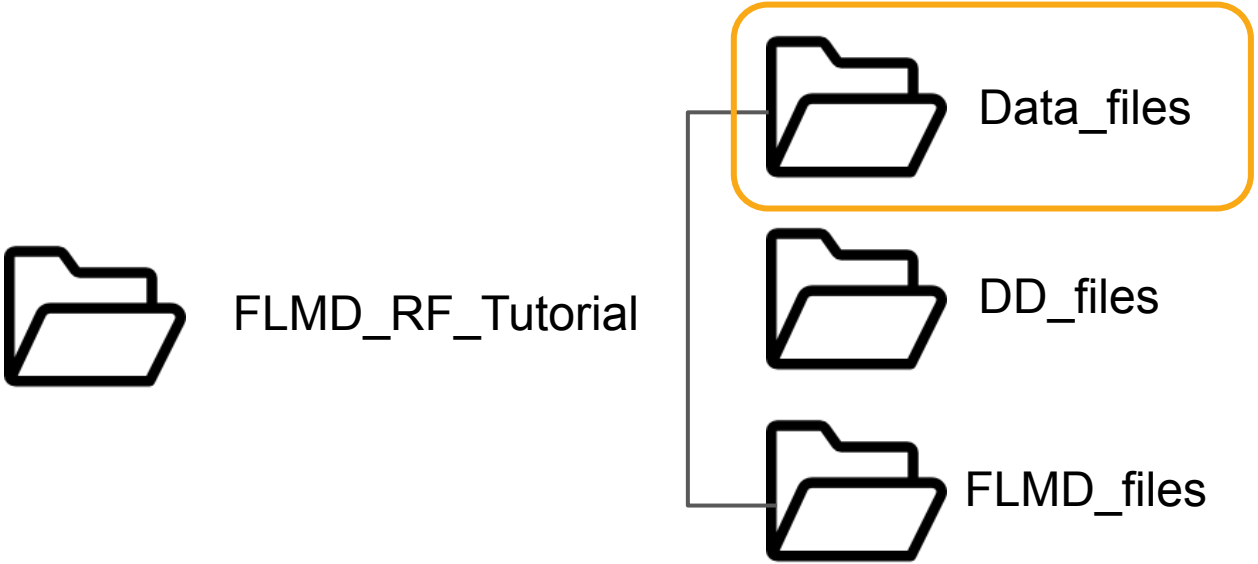

Questions about data files

Open ‘**datafile1.xlsx**’ on your computer and look at tab labeled **‘Data_Sheet’** [ignore metadata information tab for now]

- What do 1st and 2nd rows represent?
- Any guesses on how missing values are represented?
- Other questions?

Open ‘**datafile2.xlsx** on your computer and look at tab labeled **‘Data_Sheet’**

- What’s different about the structure of these tabular data?
- Other questions?

Key points from the data files

Water_temperature	pH	Dissolved_Oxygen	Turbidity	Notes
Degrees_Celsius	N/A	milligrams_per_liter	NTU	Text
10.2	-9999	11.5	1.6	pH meter did not work for
10.4	8.4	11.3	2.1	N/A
10.1	8.3	10.9	1.9	N/A
10.7	7.73	11.9	2.9	N/A
10	7.8	11.5	1.8	N/A

Filling out your data dictionaries

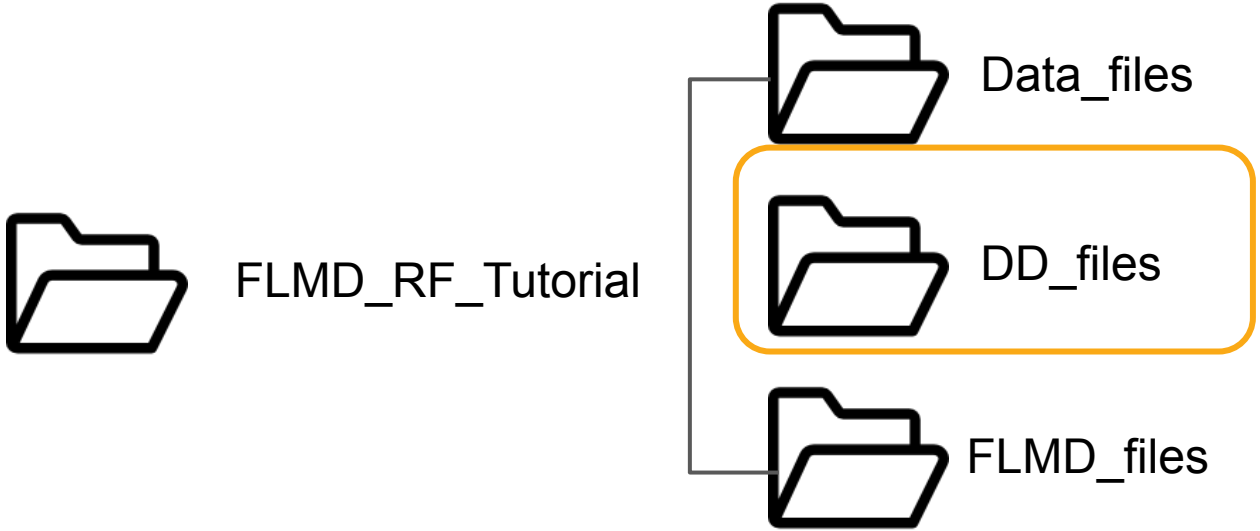

What is a data dictionary?

- Place to define variables
- Provide units

Why fill one out?

- Data reusers can understand your variables
- Limits confusion about units

Filling out your data dictionaries

Open **‘dd_blank.xlsx’**

Note that only ‘column_or_row_name’, ‘unit’ and ‘definition’ are **<u>required</u>** by ESS-DIVE

Start with ‘**datafile1**’ and transfer over your column names, units, and come up with definition for each

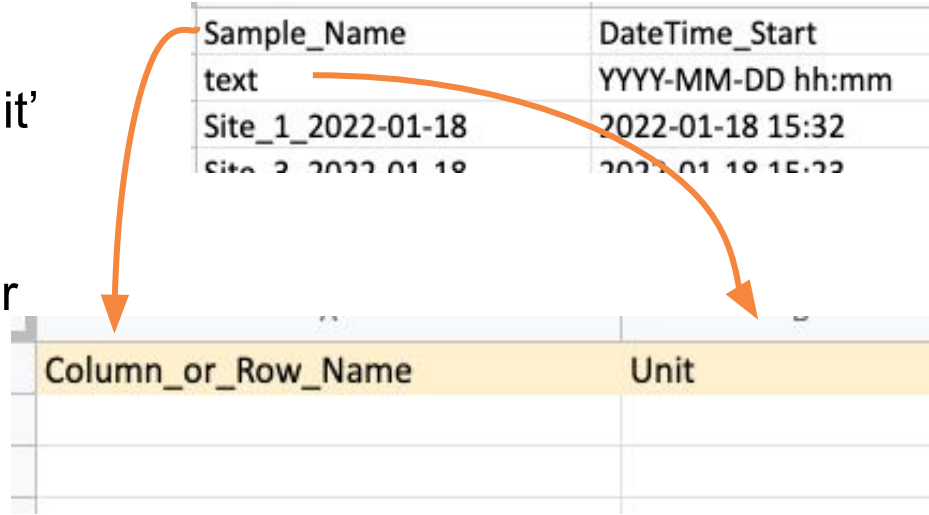

Repeat process for datafile2

Tip: repeated variables only need one DD entry. Only one DD for all of your files.

Looking at completed data dictionary

'Add file name'

Column_or_Row_Name	Unit	Definition
Sample_Name	text	name of sample
DateTime_Start	YYYY-MM-DD hh:mm	time at start of monitoring
DateTime_End	YYYY-MM-DD hh:mm	time at completion of monitoring
Location_ID	N/A	location name
Water_temperature	Degrees_Celsius	temperature of water sample collected
pH	N/A	measured pH of the water sample

Filling out file-level metadata

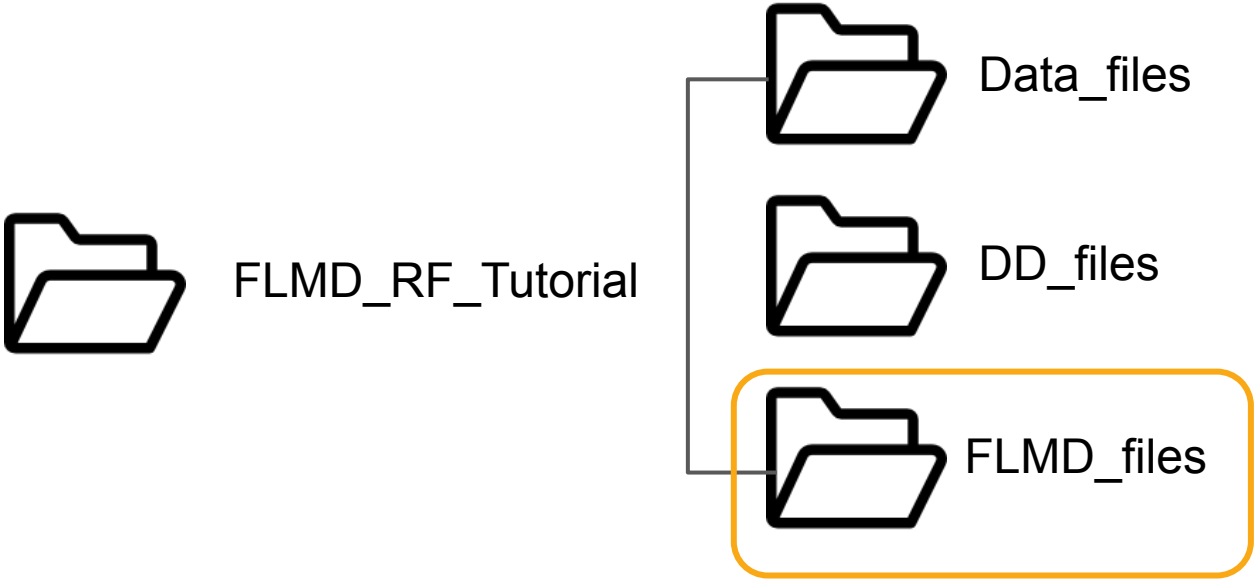

What is FLMD?

- Comprehensive list of all your data files
- Describe each

Why fill one out?

- Quick glance to understand what is contained in entire dataset

Filling out your file-level metadata templates

Open ‘**flmd_blank.xlsx**’

Note that only ‘file_name’ and ‘file_description’ are **<u>required</u>** by ESS-DIVE

Start with ‘**datafile1.xlsx**’ and transfer over items in the ‘Metadata_Information’ tab to your FLMD file.

*Repeat process for **datafile2.xlsx***

UTC Offset	- 8 hours
Contact Person	Dylan O'Ryan
File Version	1
File Description	Data file containing water quality measurements
Standard	ESS-DIVE Reporting Format for Comma-separated Values (CSV) F

File_Name	File_Description	Standard	UTC_Offset	File_Version	Contact	D

Looking at completed FLMD

File_Name	File_Description	Standard	UTC_Offset	File_Version	Contact	Date_Start
datafile1.xlsx	Data file containing water quality measurements	ESS-DIVE Reporting Format for Comma-separated Values (CSV) File Structure v1.0.0	- 8 hours	1	Dylan O'Ryan	2022-01-08
datafile2.xlsx	Data file containing water quality measurements	ESS-DIVE Reporting Format for Comma-separated Values (CSV) File Structure v1.0.0	- 8 hours	1	Rob Crystal-Ornelas	2022-04-02

File-level metadata summary

1) **Gather** all of your data files

2) **Fill out data dictionary** based on your ‘variable names’ *(only need one!)*

3) Fill out you **FLMD template** with file names and description *(only need one!)*

Break

Workshop using the CSV reporting format

The CSV Reporting Format

What is the CSV reporting format?

- The CSV file is a non-proprietary format for tabular data
- Archives tabular data in its simplest form
- Defines structure and some content

Why use the CSV reporting format?

- Specifies common format for elements within your CSV files (e.g., missing values) which make CSVs easier to read
- Reduces inconsistencies (e.g., 2021-04-26 vs. 4/26/2021)

Terri Velliquette
Oak Ridge National Laboratory

CSV formatting recommendations

12 total, including:

- Dates formatting in ISO format **YYYY-MM-DD**

- **Units** should be separated from variable names (in a 2nd row or data dictionary)

- Convert **special characters** to text

- Missing text **(N/A)** missing numbers **(-9999)**

Sample Name	Date	Time Collected	Water Temperature Celsius	Dissolved Oxygen mg/L	Electrical Conductivity µS	Notes
Site 1 Sample	2022-01-12	1:05 PM	22 C	10.05	46.3 uS	
Site 2 Sample	01/12/2022	13:50	20.7		45.5	
Site 3 Sample	01-12-22	14:22	19.7	Water level too low to test DO	54.5 uS	
Site 4 Sample	2022-01-12	14:56		10.56	45 µS	
Site 5 Sample	2022-01-12	3:12 PM	21.9	9.89		
Site 6 Sample	01/12/2022	16:04		11.01	45.2	Thermometer ran out of power

Sample_Name	Date	Time_Collected	Water_Temperature	Dissolved_Oxygen	Electrical_Conductivity	Notes
N/A	YYYY-MM-DD	hh:mm	Degrees_Celsius	miligrams_per_Liter	microsiemens	N/A
Site 1 Sample	2022-01-12	13:05	22	10.05	46.3	N/A
Site 2 Sample	2022-01-12	13:50	20.7	-9999	45.5	N/A
Site 3 Sample	2022-01-12	14:22	19.7	-9999	54.5	Water level too low
Site 4 Sample	2022-01-12	14:56	-9999	10.56	45	N/A
Site 5 Sample	2022-01-12	15:12	21.9	9.89	-9999	N/A
Site 6 Sample	2022-01-12	16:04	-9999	11.01	45.2	Thermometer ran out of power

CSV reporting format summary

1) Consistently format **date and time**

2) Separate **units** from variables

3) Use **N/A** and **-9999** for missing values

4) See documentation for more tips!

DOE Projects Using Reporting Formats

Watershed Function SFA use of ESS-DIVE Reporting Formats

ESS PI Meeting | May 24, 2022

Dylan O'Ryan[1,2], Charuleka Varadharajan[1], Erek Alper[3], Kristin Boye[4], Madison Burrus[1], Danielle Christianson[1], Shreyas Cholia[1], Robert Crystal-Ornelas[1], Joan Damerow[1], Wenming Dong[1], Hesham Elbashandy[1], Boris Faybishenko[1], Valerie Hendrix[1], Douglas Johnson[3], Zarine Kakalia[1,5], Roelof Versteeg[3], Kenneth Williams[1], Catherine Wong[1,5], Deborah Agarwal[1]

1) Lawrence Berkeley National Laboratory 2) California State University, Sacramento 3) Subsurface Insights 4) SLAC National Accelerator Laboratory 5) University of California, Berkeley

U.S. DEPARTMENT OF ENERGY | Office of Science

BERKELEY LAB

Watershed Function SFA

U.S. DOE research project that seeks to determine how mountainous watersheds retain and release water, carbon, nutrients, and metals

Community Field Observatory in **East River, Colorado**

Over **30 collaborating institutions** from around the United States, main effort led by Lawrence Berkeley National Laboratory

Photo credit: Connor Scalbom

WFSFA Field-Data Workflow

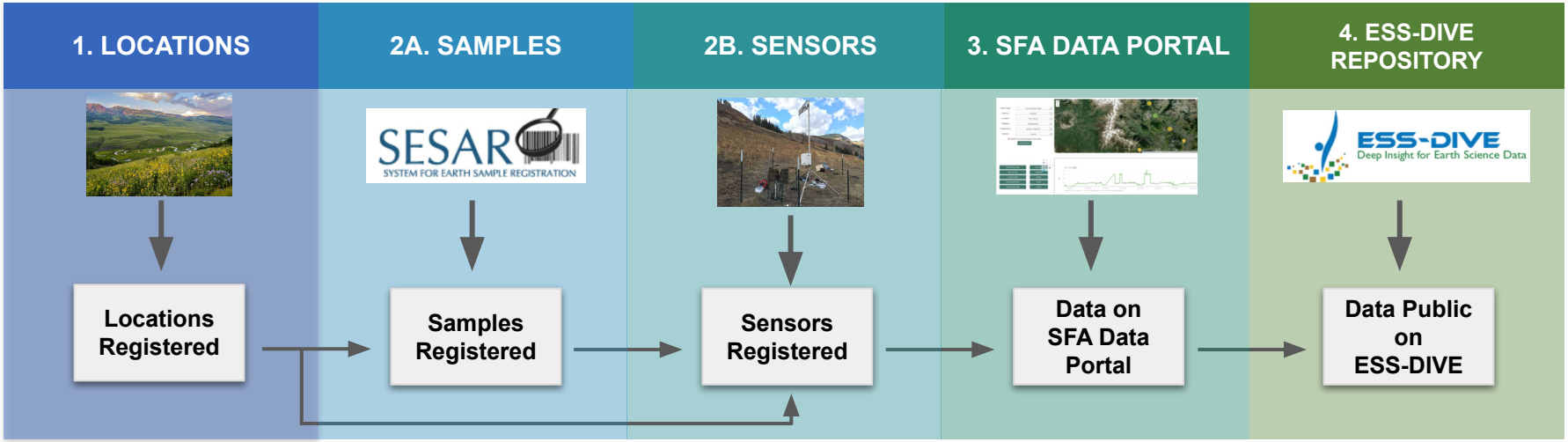

WFSFA's Purpose of Using RFs

- Primary use of **Water-Soil-Sediment Chemistry RF**
- Additional use of other reporting formats: **Samples IDs and Metadata**, **Comma Separated Values**, and **File-level metadata**

- Enable use of data beyond initial intent for collection
- Standardized geochemical data enables future **modeling** and **analysis** of data

Water-Soil-Sediment Chemistry Reporting Format

What was the goal of the reporting format?

- Harmonize chemical concentration data that span several measurement types

What are the components of the reporting format?

- Data file, methods file, file-level metadata file, and data dictionary file (*optional* terminology file)

Kristin Boye
SLAC NATIONAL ACCELERATOR LABORATORY

(Crystal-Ornelas et al., in review)

Data File Conversion

Sample_Name	dateTime	DIC_mg/l
Bradley-2021-06-11	2021-06-11	16.36
Bradley-2021-06-18	2021-06-18	17.24
Bradley-2021-06-24	2021-06-24	19.11
Bradley-2021-07-02	2021-07-02	19.53
Bradley-2021-07-09	2021-07-09	19.79
Bradley-2021-07-15	2021-07-15	19.99
Copper-2021-06-11	2021-06-11	12.55
Copper-2021-06-18	2021-06-18	11.94
Copper-2021-06-24	2021-06-24	12.52
Copper-2021-07-02	2021-07-02	13.3
Copper-2021-07-09	2021-07-09	13.38
Copper-2021-07-15	2021-07-15	14.12
EAQ-2021-06-11	2021-06-11	21.06
EAQ-2021-06-18	2021-06-18	20.9
EAQ-2021-06-24	2021-06-24	21.7
EAQ-2021-07-02	2021-07-02	23.57
EAQ-2021-07-09	2021-07-09	25.11
EAQ-2021-07-15	2021-07-15	26.55
EBC-2021-06-11	2021-06-11	16.03
EBC-2021-06-18	2021-06-18	16.41
EBC-2021-06-24	2021-06-24	17.65
EBC-2021-07-02	2021-07-02	17.77
EBC-2021-07-09	2021-07-09	18.91
EBC-2021-07-15	44392	19.72
GLS-1-2021-06-11	2021-06-11	46.94
GLS-1-2021-06-24	2021-06-24	50.07

#Columns	8					
#Header_Rows	11					
Field_Name	Sample_Name	IGSN	Material	dateTime	DIC_mg.L	
Unit	N/A	N/A	N/A	YYYY-MM-DD	mg/L	
Unit_Basis	N/A	N/A	N/A	N/A	milligrams_per_Liter	
MethodID_Storage	N/A	N/A	N/A	N/A	Storage_Sample	
MethodID_Preservation	N/A	N/A	N/A	N/A	Refrig_Sample	
MethodID_Preparation	N/A	N/A	N/A	N/A	Filt_Sample	
MethodID_Analysis	N/A	N/A	N/A	N/A	DIC_Anl	
Analysis_DetectionLimit	N/A	N/A	N/A	N/A	0.88	
Analysis_Precision	N/A	N/A	N/A	N/A	0 - 50	
MethodID_DataProcessing	N/A	N/A	N/A	N/A	PRCS_TOC-VCPH	
Data_Status	N/A	N/A	N/A	raw	processed data	
#Start_Data	Bradley-2021-06-11	IEWFS006F	Surface water	2021-06-11	16.36	
N/A	Bradley-2021-06-18	IEWFS006G	Surface water	2021-06-18	17.24	
N/A	Bradley-2021-06-24	IEWFS006H	Surface water	2021-06-24	19.11	
N/A	Bradley-2021-07-02	IEWFS007C	Surface water	2021-07-02	19.53	
N/A	Bradley-2021-07-09	IEWFS007D	Surface water	2021-07-09	19.79	
N/A	Bradley-2021-07-15	IEWFS007E	Surface water	2021-07-15	19.99	
N/A	Copper-2021-06-11	IEWFS006I	Surface water	2021-06-11	12.55	
N/A	Copper-2021-06-18	[illegible]	Surface water	2021-06-18	11.94	

Methods Files

Method_ID	Method_Type	Method_Description
Filt_Sample	Field Filtering of Sample	Water samples for DOC, DIC, and TDN analysis were filtered using 0.45 micrometer Millipore filters
Storage_Sample	Storage of Filtered Samples	Filtered samples were collected in no-headspace 40 mL glass vials with polypropylene open-top caps and butyl rubber septa (VWR TraceClean)
Refrig_Sample	Refrig Storgage Samples [Preservation] (QA)	Samples were transported to laboratory on ice and stored in 4 degree C refrigerator until analysis.

File-Level Metadata File (flmd)

File_Name	File_Description	Standard	Location_ID
locations.csv	Location information for the sites containing data. This file contains both Location_IDs and the latitude and longitude measurements associated with the Location_IDs.	ESS-DIVE Reporting Format for Comma-sep	N/A
cc_irw1_deltad.csv	Data for liquid water delta2H	ESS-DIVE Reporting Format for Comma-sep	CC-IRW1
cc_irw1_deltao18.csv	Data for liquid water delta18O	ESS-DIVE Reporting Format for Comma-sep	CC-IRW1
cc_lmr1_deltad.csv	Data for liquid water delta2H	ESS-DIVE Reporting Format for Comma-sep	CC-LMR1
cc_lmr1_deltao18.csv	Data for liquid water delta18O	ESS-DIVE Reporting Format for Comma-sep	CC-LMR1

Data Dictionary (dd)

Column_or_Row_Name	Unit	Definition
utc_time	YYYY-MM-DD	Date samples were collected in the field
location_name	N/A	Location_ID for the sites at the WFSFA field site
latitude	decimal degree	Latitude of the locaton where data was collected
longitude	degree	Longitude of the location where data was collected
dic_mg/l	milligrams per liter (mg/l)	mean values for dissolved organic carbon (DOC) in milligrams per liter (mg/l)
npoc_mg/l	milligrams per liter (mg/l)	mean values for dissolved organic carbon (DOC) analyzed as non-purgeable organic carbon (NPOC) in milligrams per liter (mg/l)

Lessons Learned and Tips

- **Conversion** and **use** becomes easier
- In our experience, ~ 1 hour to convert an **existing** dataset

- **Reuse** templates when data and methods are unchanged, then **populate** with variable specific information

Image from WSFA Field Information Portal:
https://wfsfa-data.lbl.gov/watershed/sites/ER-BRD1

Thanks for Listening!

Acknowledgement: This work was supported by the US Department of Energy, Office of Biological and Environmental Research as part of the LBNL Watershed Function Scientific Focus Area

U.S. DEPARTMENT OF ENERGY | Office of Science

BERKELEY LAB

ESS-DIVE Reporting Format Automated Workflows in the River Corridor SFA

US DOE BER ESS PI Meeting - May 24, 2022

Amy Goldman

amy.goldman@pnnl.gov
https://www.pnnl.gov/projects/river-corridor
https://whondrs.pnnl.gov
@WHONDRS

Thank you to the RC SFA and WHONDRS data wranglers and supporters: Bob Danczak, Brieanne Forbes, Vanessa Garayburu-Caruso, Stephanie Fulton, Brianna Gonzalez, Sammi Grieger, Matt Kaufman, Xinming Lin, Sophia McKever, Allison Myers-Pigg, Opal Otenburg, Huiying Ren, Lupita Renteria, Tim Scheibe, and James Stegen

River Corridor Science Focus Area (RC SFA)

Studying and improving prediction of river corridor hydrobiogeochemical functions from molecular reaction to watershed and basin scales

Field sites across the Yakima River Basin in Washington and has a global reach via the Worldwide Hydrobiogeochemistry Observation Network for Dynamic River Systems (WHONDRS)

Dozens of data types, hundreds of collaborators, thousands of samples

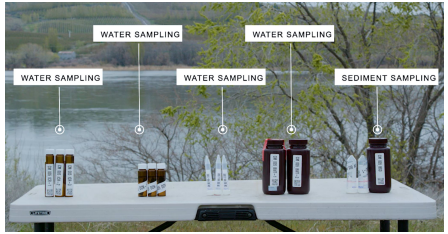

Data reuse is a priority for the RC SFA

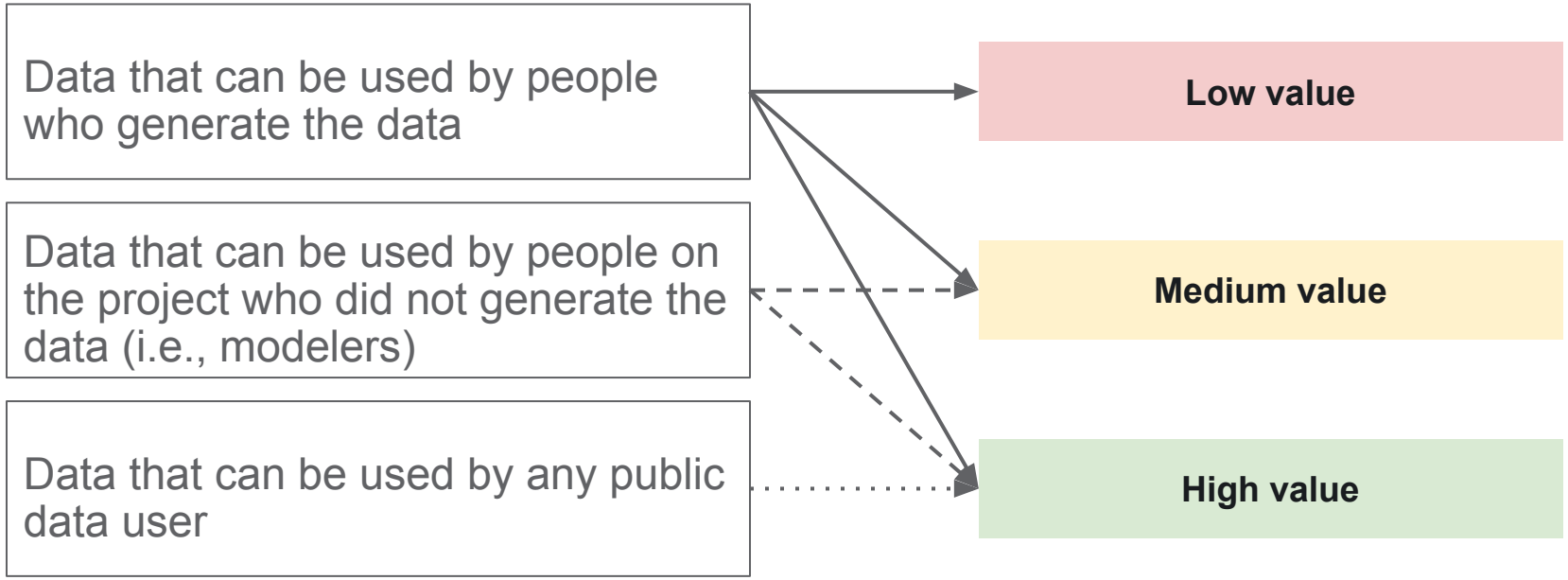

Data reuse is a priority for the RC SFA

Data that can be used by people who generate the data

Data that can be used by people on the project who did not generate the data (i.e., modelers)

Data that can be used by any public data user

High value

The RFs create a final data product that is higher value to our team, collaborators, and other data users

Automated pipeline allows use of RFs across data types, datasets, and team members

	Raw data	Manual code inputs	Run codes	Review output	Include in data package
Soil-Sediment-Water Chemistry RF	Ions, dissolved (in)organic carbon, total suspended solids, etc	Methods codes, deviations from those methods, etc	QAQC and final RF formatting	Data file and methods code definition file	Plus field metadata, data dictionary, file-level metadata, readme

Automated pipeline allows use of RFs across data types, datasets, and team members

	Raw data	Manual code inputs	Run codes	Review output	Include in data package
Soil-Sediment-Water Chemistry RF	Ions, dissolved (in)organic carbon, total suspended solids, etc	Methods codes, deviations from those methods, etc	QAQC and final RF formatting	Data file and methods code definition file	Plus field metadata, data dictionary, file-level metadata, readme
Hydrologic Monitoring RF	Temperature, pH, depth, turbidity, specific conductance, dissolved oxygen, etc	Methods codes, instrument summaries	QAQC and final RF formatting	Data file(s) and installation methods file	Plus field metadata, data dictionary, file-level metadata, readme

Datasets also follow CSV RF, FLMD RF, and Sample ID and Metadata RF

FAIR data publishing is high effort and high reward

Pacific Northwest NATIONAL LABORATORY

ESS Environmental System Science

Reach out with questions, comments, and ideas to Amy.Goldman@pnnl.gov

https://www.pnnl.gov/projects/river-corridor

https://whondrs.pnnl.gov

@WHONDRS

Integrated Coordinated Open Networked SCIENCE COOPERATIVE
Science for and by the community

WHONDRS
Worldwide Hydrobiogeochemistry Observation Network for Dynamic River Systems

Thank you to the RC SFA and WHONDRS data wranglers and supporters: Bob Danczak, Brieanne Forbes, Vanessa Garayburu-Caruso, Stephanie Fulton, Brianna Gonzalez, Sammi Grieger, Matt Kaufman, Xinming Lin, Sophia McKever, Allison Myers-Pigg, Opal Otenburg, Huiying Ren, Lupita Renteria, Tim Scheibe, and James Stegen

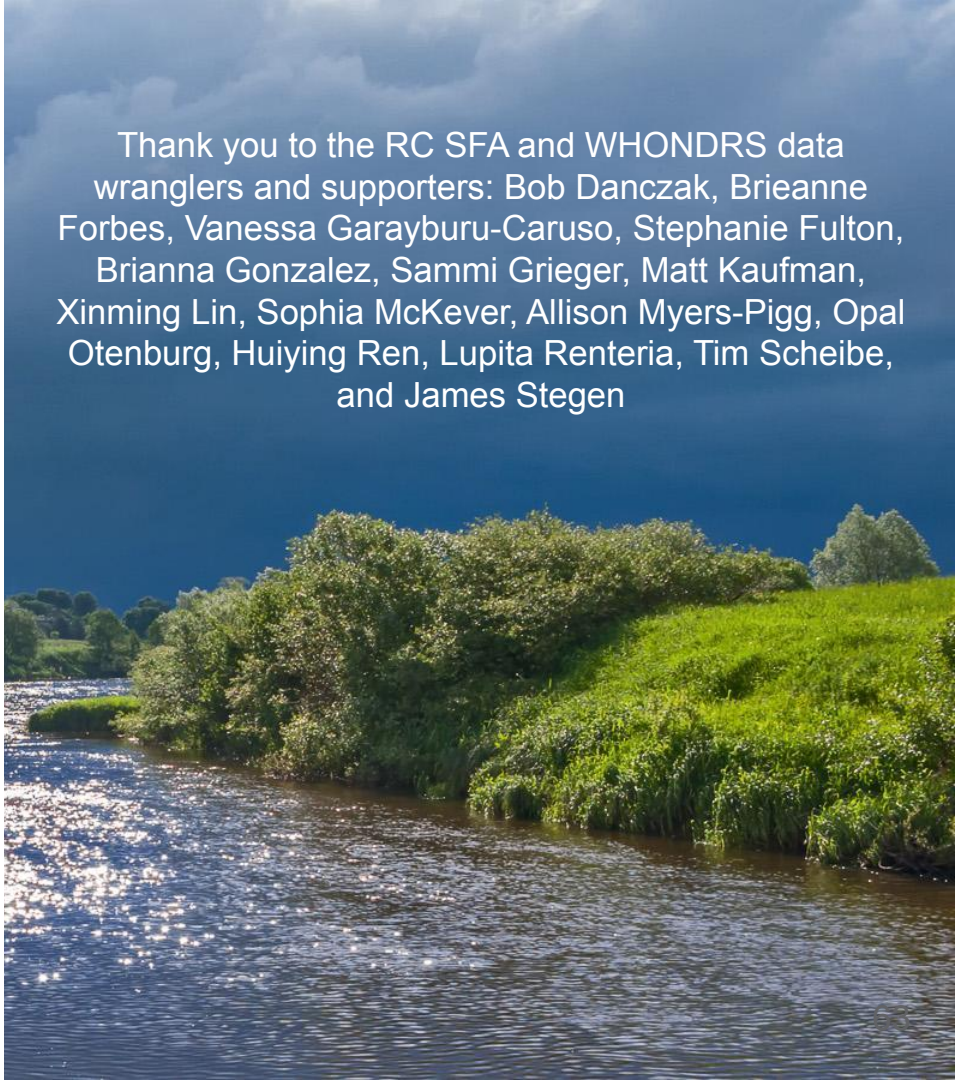

Questions for presenters

Summary

Where you can learn more

- ESS-DIVE's **community GitHub page:**

  https://github.com/ess-dive-community
- **Website** that links to each reporting format:

  https://docs.ess-dive.lbl.gov/contributing-data/data-reporting-formats
- **Paper** about the reporting formats (in review)

Published datasets that use reporting formats

- **Water chemistry, Sample ID, CSV, FLMD**: Garayburu-Caruso, V. A. *et al.* (2021) doi:10.15485/1834208
- **Sample ID, CSV, FLMD**: Alves, R. J. E. *et al.*. (2021) doi:10.15485/1830417.
- **Leaf-level gas exchange**: Rogers, A., Ely, K. & Serbin, S. (2021) https://www.osti.gov/biblio/1482338

Thanks!

@ESS-DIVE

Join ESS-DIVE's Community Mailing List!

http://bit.ly/essdiveMailingList

Contact us at ess-dive-support@lbl.gov

Questions?